Deliver to Brandan
Melbourne 32934

Industrial & Scientific

Search Amazon

Upgrade your headphones
Hear richer sound and deeper bass
Shop now

6-22v 200W DC Planet Gear Motor 90kg.cm High Torque Mini Metal Geared Motor for DIY Robot Rotating Table Door Lock Curtain Machine

Visit the DOCYKE Store

4.6 (24) | Search this page

No better price found

Amazon's Choice

50+ bought in past month

$29.99

Price history

Overnight

FREE Returns

Edition: **90KG.CM**

90KG.CM	350KG.CM	550KG.CM
$29.99	$39.99	$49.99
FREE Delivery	FREE Delivery	FREE Delivery
Overnight 4 AM - 8 AM	**Overnight 4 AM - 8 AM**	**Overnight 4 AM - 8 AM**

Bundles with this item

Brand	DOCYKE
Model Name	DC planet Gear Motor
Speed	278 RPM
Product Dimensions	2.6"W x 1.65"H
Material	Alloy Steel

Click to see full view

Ask Rufus

What materials is this made of?

Can it be used for outdoor projects?

Does it require a specific power supply?

Ask something else

About this item

- Voltage range6V-22v DC planet Gear Motor 90kg.cm High Torque Mini metal Geared Motor for DIY Robot Rotating Table Door Lock Curtain Machine
- Feature: Output D-Shaft Diameter: 8mm; The motor is DC planet metal Gear motor , you can change the wiring-connection to change motor rotation.
- Application: bank equipment, safe box, paper feeder, intelligent gas meter, tissue machine, accessory of automobile, ad equipment, analysis instrument, electronic game machine,electrical appliances including remote control curtains, locks, paper shredders, copying machines, and safes Inner.
- if you need other voltage and rpm, pls contact us Quanlity Insurance: Any quality issues, we promise 100% unconditional return service.

› See more product details

Customers usually keep this item
This product has fewer returns than average compared to similar products.

Report an issue with this product or seller

$29.99

Overnight

FREE delivery **Overnight 4 AM - 8 AM**. Order within 4 hrs 48 mins

Shorter shipping distance

Deliver to Brandan - Melbourne 32934

In Stock

Quantity: 1

Add to cart

Buy Now

Ships from	Amazon
Sold by	DOCYKE USA
Returns	FREE 30-day refund/replacement
Gift options	Available at checkout

See more

Add to List

Deliver to Brandan
Melbourne 32934

Industrial & Scientific

through One Medical Pay-per-visit (formerly Amazon Clinic). Get treatment now >

Customers also bought

Based on products customers bought together

This item: 6-22v 200W DC Planet Gear Motor 90kg.cm High Torque Mini Metal Geare…
4.6 24
$29.99

+

Sponsored
uxcell 5mm to 8mm Bore Rigid Coupling Set Screw L22XD14 Stainless Steel,Shaft Coupler…
4.5 667
$9.99

+

Sponsored
Zeberoxyz 2PCS Set GT2 Synchronous Wheel 20&80 Teeth 10mm Bore Aluminum…
4.3 918
$16.89

Total price: $56.87

Add all 3 to Cart

Some of these items ship sooner than the others.
Show details

Products related to this item Sponsored

Page 1 of 58

BRINGSMART DC Motor 24V 260rpm DC Worm Gear Motor 6.2kg.cm Self-Locking Reversed…
731
$28.97

Maxynos Thor 2826 Planetary Gear Brushless Motor (Outrunner), DC 15 V, 4 N·m (40.8 …
3
$58.99

Maxynos Thor 3548 Planetary Gear Brushless Motor (Outrunner), DC 18 V, 10.5 N·m (10…
1
$72.99

Maxynos Thor 2830 Planetary Gear Brushless Motor (Outrunner), DC 15 V, 4.6 N·m (46….
2
$62.99

Fexhull 23657 Wall Slide-Ou for lippert-Scl Wall Slide S…
$29.99

Based on your recent views Sponsored

Page 1 of 58

BRINGSMART 12V 40rpm DC Worm Gear Motor 40kg.cm Self-Locking Reversed…
731
Amazon's Choice
$28.97

Bringsmart 37mm Diameter Gearbox with Bracket Micro DC 12V 20rpm Geared Motor…
206
$21.57

Greartisan DC 12V 120RPM Turbo Worm Geared Motor High Torque Turbine Worm…
625
$15.99

High Torque DC Motor 12V/24V, DIY Project Quiet Motor Permanent Magnet Motor with C…
45
$21.69

Thor 2826 Pla Gear Brushles (Outrunner), [N·m (40.8 kg·
$58.99

Product description

Can be installed easyly

There are multiple mounting holes on the product, which support the dual mounting options on the reducer—you can use either the face mount or foot mount, depending on your project needs.

M4 bolts are used for easy installation,

Deliver to Brandan
Melbourne 32934

Industrial & Scientific

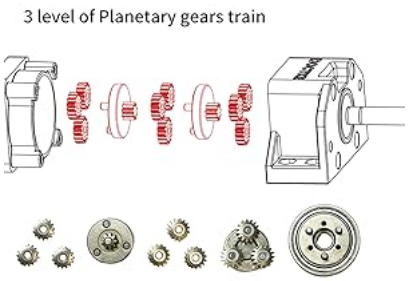

metal planetary gears

Using high-strength metal planetary gears to provide greater torque transmission in the smallest possible size

Deliver to Brandan
Melbourne 32934

Industrial & Scientific

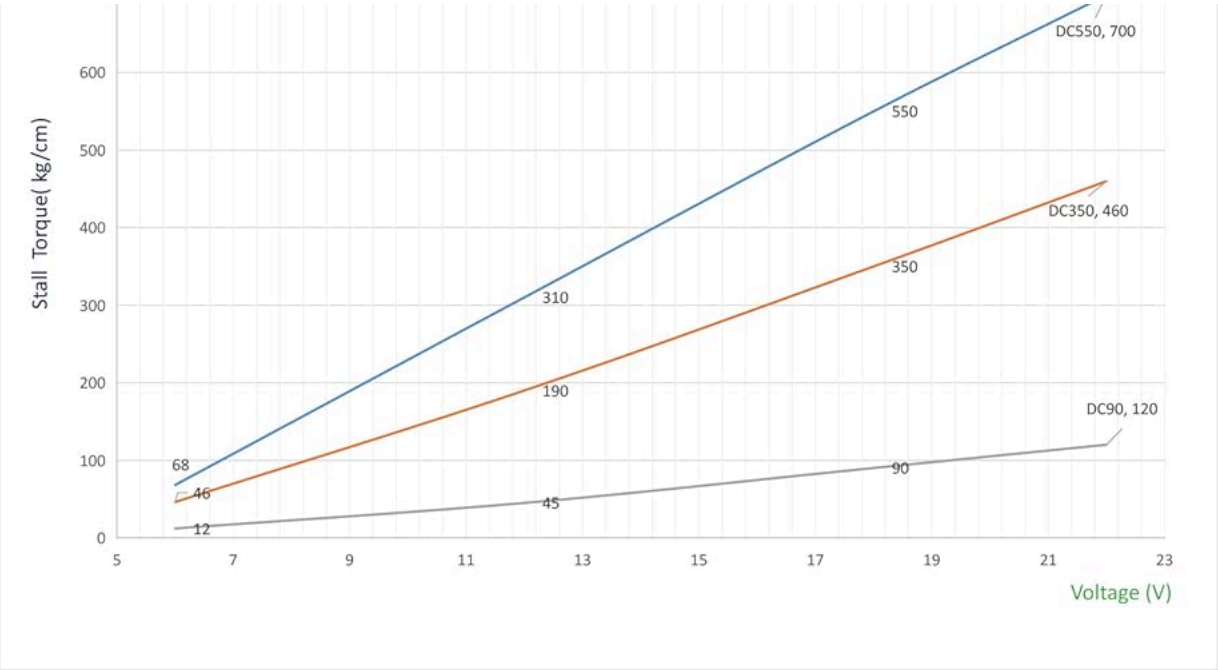

Torque and voltage performance Curve

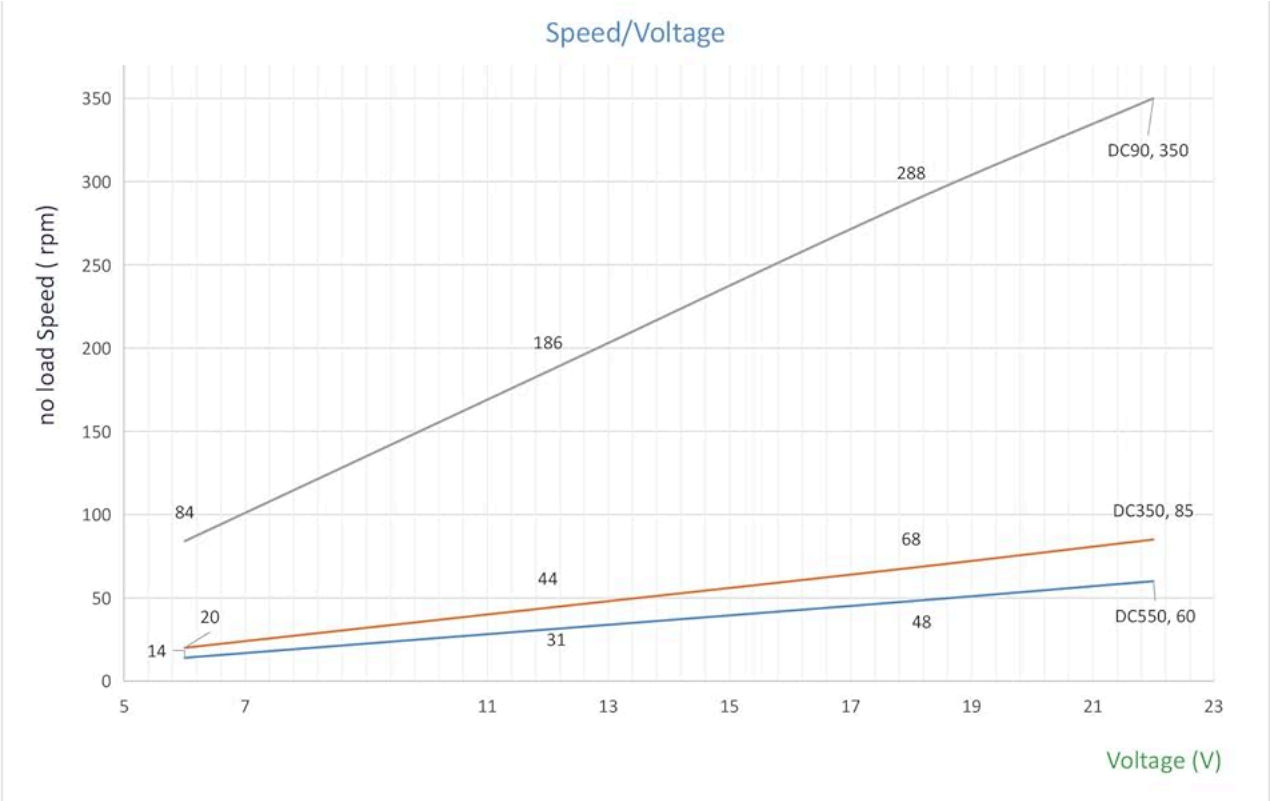

speed and voltage performance Curve

parameter

Deliver to Brandan
Melbourne 32934

Industrial & Scientific

DC Planet Gear Motor

Model	DC90	DC350	DC550
Rated voltage	18V	18V	18V
Voltage range	6-22V	6-22V	6-22V
Max. current	25A	25A	25A
Max. torque	90KG.CM	350KG.CM	550KG.CM
Reducer ratio	i=36	i=151.4	i=216
Net weight	428G	428G	428G

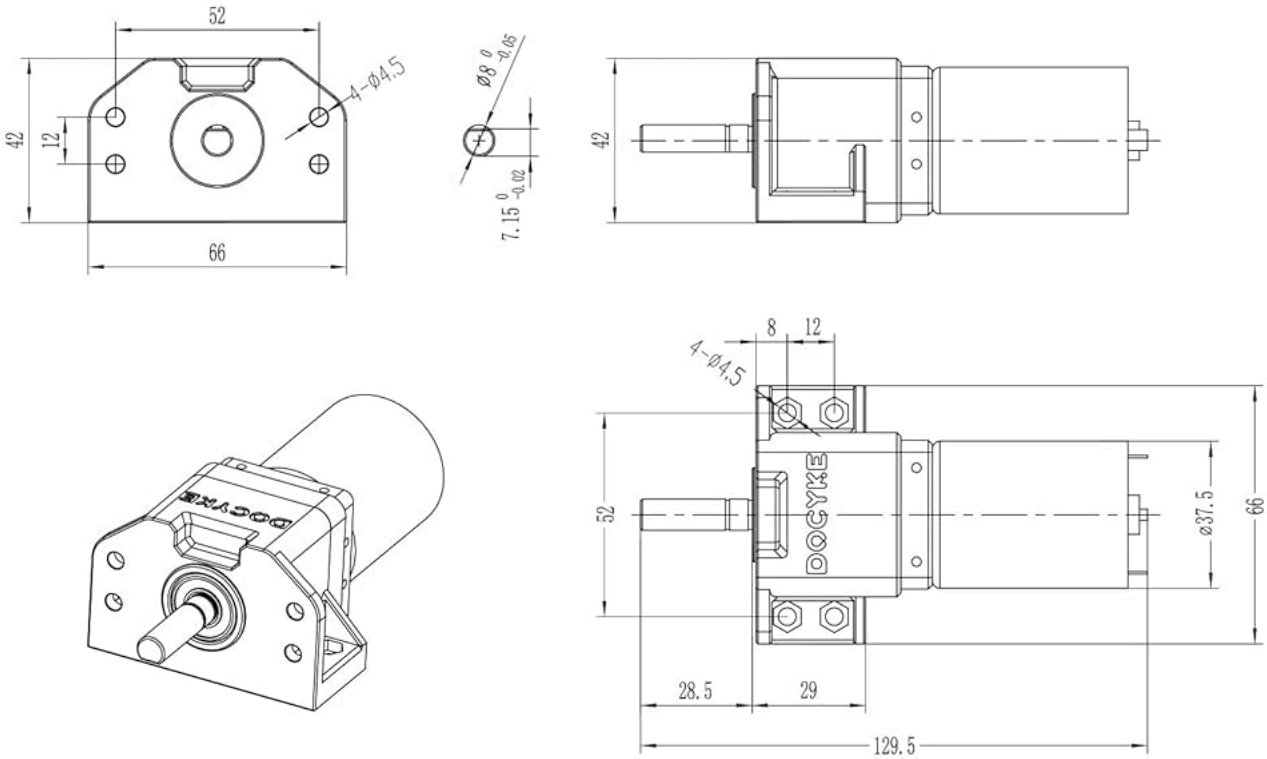

See Less

Product information

Item details

Brand Name	DOCYKE
Model Name	DC planet Gear Motor
Model	DC90

Features & Specs

Speed	278 RPM

Measurements

Deliver to Brandan
Melbourne 32934

Industrial & Scientific

Best Sellers Rank	#37,190 in Industrial & Scientific (See Top 100 in Industrial & Scientific) #7 in Robot Parts
ASIN	B0DZ24DMTY
Customer Reviews	4.6 (24) 4.6 out of 5 stars

Additional details

Material Type	Alloy Steel

Feedback

Would you like to **tell us about a lower price?**

From the brand

Product Videos

Deliver to Brandan
Melbourne 32934

Industrial & Scientific

DC gear motor
DOCYKE USA

Customer Review: Great little motor. Powerful!
DoctorCreepy

6v 12V18V 22v 200W-DC Planet Gear Motor 350kg.cm High Torque Mini…
24
$39.99

6-22v 200W DC P
90kg.cm High Tor
24
$29.99

Looking for specific info?

Ask Rufus or search reviews and Q&A

What materials is this made of? | Can it be used for outdoor projects? | Does it require a specific power supply? | Is it easy to install? | Can it be used in a car?

What's in the box

- Dc gear motor

Related products with free delivery Sponsored

Page 1 of 58

BRINGSMART 12V 5rpm DC Worm Gear Motor 35kg.cm Self-Locking Reversed Mini Turbine…
731
Amazon's Choice
$28.97

Greartisan DC 24V 87RPM Gear Motor High Torque Electric Micro Speed Reduction Geare…
1,047
$14.99

DC 12V 35W Mini DC Gear Motor Metal Speed Adjustable Large Motor CW/CCW(12v 600rpm)
8
$39.82

Greartisan DC 12V 50RPM Turbo Worm Geared Motor High Torque Turbine Worm…
625
$14.99

Bringsmart 37
Diameter Gea
Bracket Micro
20rpm Geared
2
$21.57

Similar brands on Amazon

Sponsored

Deliver to Brandan
Melbourne 32934

Industrial & Scientific

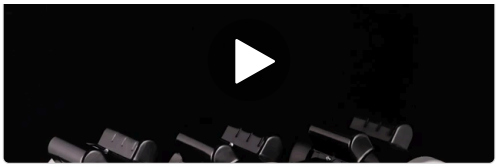

Customer reviews

4.6 out of 5

24 global ratings

5 star	85%
4 star	7%
3 star	0%
2 star	0%
1 star	8%

How customer reviews and ratings work

Review this product

Share your thoughts with other customers

Write a customer review

Reviews with images

See all photos ›

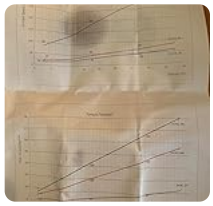

Top reviews from the United States

DoctorCreepy

Great little motor. Powerful!

Reviewed in the United States on January 15, 2026

Edition: 90KG.CM **Verified Purchase**

I 'm making a rock/bottle tumbler for me *bottles* and the little lady *semi precious stones*. So I bought this motor on a whim. When I first got it i though it was too small but I was pleasantly surprised to see how powerful it really is. This motor will go on the permeant machine now that it pushes the prototype really really well. It's very responsive from 6v to 12v. I haven't pushed it any higher than that.

Helpful Report

John B.

Powerful motor in small package - reasobably priced!

Reviewed in the United States on October 29, 2025

Edition: 550KG.CM **Verified Purchase**

This is one powerful little motor. I plan to use it to raise and lower the swing keel on me sailboat and tried lifting a 25 pound weight as a simple test. NO PROBLEM! Sure surprised me. shouldn;'t have a problem with the swing keel. Reversable, can combine with a PWM speed control (verified) and it should be good to go! Fast delivery, reasonable price and it works as by data sheets.

2 people found this helpful

Helpful Report

Double B

All I can say is Wow! This will move mountains!

Reviewed in the United States on October 2, 2025

Edition: 350KG.CM **Verified Purchase**

Deliver to Brandan
Melbourne 32934

Industrial & Scientific

the 350kg-cm motor. The high power one would probably rip your arm off!

I recommend to anyone this one, Only been using it for a month now, will update in a year is able to....

2 people found this helpful

Helpful Report

songsinger

Great motor for your project

Reviewed in the United States on November 13, 2025

Edition: 350KG.CM **Verified Purchase**

Very easy to hook up and setup, plenty of torque for my application (turning an applesauce maker). Very quiet as motors go.

Helpful Report

Matt Ray

Exceptional quality, just as advertised

Reviewed in the United States on November 3, 2025

Edition: 550KG.CM **Verified Purchase**

What a workhorse! Amazing power and quality and solid sales process. I'm a fan of this company now.

Helpful Report

eduardo

false ad

Reviewed in the United States on February 16, 2026

Edition: 350KG.CM **Verified Purchase**

they advertise 24v but the paperwork that comes with it clearly states 18v.....

Helpful Report

Ben H

Nice size and torque

Reviewed in the United States on November 20, 2025

Edition: 550KG.CM **Amazon Vine Customer Review of Free Product** (What's this?)

Pretty nice and heavy duty motor/gearbox. Looks small but it is powerful. I have it running in the video at about half speed. No way you're going to stop this with your fingers!

One person found this helpful

Helpful Report

Daniel

Strong motor

Reviewed in the United States on September 21, 2025

Edition: 550KG.CM **Amazon Vine Customer Review of Free Product** (What's this?)

Very powerful little motor! The torque is impressive, and the build quality feels solid with the metal gears. Works great for DIY projects and runs smoothly. Exactly what I needed for my setup.

Deliver to Brandan
Melbourne 32934

Industrial & Scientific

See more reviews ›

Customers who bought this item also bought

DC Planet Gear Motor Controller
1
$19.99
FREE One-Day Get it Tomorrow, Feb 23

Sponsored
High Torque DC Motor 12 V/24 V Permanent Magnet Motor Mini DC…
238
$25.09
Overnight by 8:00 AM

4Pcs 8mm Flange Coupling Connector, Rigid Guide Model Coupler Accessory, Shaft Axis…
804
#1 Best Seller
$8.59
Overnight by 8:00 AM

Sponsored
Greartisan DC 24V 500RPM Gear Motor High Torque Electric Micro…
1,047
$14.99
FREE One-Day Get it Tomorrow, Feb 23

Zeberoxyz 2PCS Set GT2 Synchronous Wheel 20&60 Teeth 8mm Bore Aluminum Timing Pulle.
918
Amazon's Choice
$12.89
Overnight by 8:00 AM

Back to top

Get to Know Us
- Careers
- Amazon Newsletter
- About Amazon
- Accessibility
- Sustainability
- Press Center
- Investor Relations
- Amazon Devices
- Amazon Science

Make Money with Us
- Sell on Amazon
- Sell apps on Amazon
- Supply to Amazon
- Protect & Build Your Brand
- Become an Affiliate
- Become a Delivery Driver
- Start a Package Delivery Business
- Advertise Your Products
- Self-Publish with Us
- Become an Amazon Hub Partner
- › See More Ways to Make Money

Amazon Payment Products
- Amazon Visa
- Amazon Store Card
- Amazon Secured Card
- Amazon Business Card
- Shop with Points
- Credit Card Marketplace
- Reload Your Balance
- Gift Cards
- Amazon Currency Converter

Let Us Help You
- Your Account
- Your Orders
- Shipping Rates & Policies
- Amazon Prime
- Returns & Replacements
- Manage Your Content and Devices
- Recalls and Product Safety Alerts
- Registry & Gift List
- Help

English | United States

Amazon Music
Stream millions of songs

Amazon Ads
Reach customers wherever they spend their time

6pm
Score deals on fashion brands

AbeBooks
Books, art & collectibles

ACX
Audiobook Publishing Made Easy

Sell on Amazon
Start a Selling Account

Veeqo
Shipping Software Inventory Management

Amazon Business
Everything For Your Business

Amazon Fresh
Groceries & More Right To Your Door

AmazonGlobal
Ship Orders Internationally

Home Services
Experienced Pros Happiness Guarantee

Amazon Web Services
Scalable Cloud Computing Services

Audible
Listen to Books & Original Audio Performances

Box Office Mojo
Find Movie Box Office Data

Goodreads
Book reviews & recommendations

IMDb
Movies, TV & Celebrities

IMDbPro
Get Info Entertainment Professionals Need

Kindle Direct Publishing
Indie Digital & Print Publishing Made Easy

Amazon Photos
Unlimited Photo Storage Free With Prime

Prime Video Direct
Video Distribution Made Easy

Shopbop
Designer Fashion Brands

Deliver to Brandan
Melbourne 32934

Industrial & Scientific

Grocery Store

Neighbors App
Real-Time Crime & Safety Alerts

Amazon Subscription Boxes
Top subscription boxes – right to your door

PillPack
Pharmacy Simplified

Amazon Renewed
Refurbished tech you can trust

Amazon Luna
Video games from the cloud, no console required

Conditions of Use Privacy Notice Consumer Health Data Privacy Disclosure Your Ads Privacy Choices

© 1996-2026, Amazon.com, Inc. or its affiliates

1

1

1

1

1